Project_ _____

Item_ _____

Quantity_ _____

Date_ _____

SP 010 XR

MODEL		
SPIDOGLASS SP010XR **X.PRO**	• **Upper ribbed , lower smooth surfaces**	• **Max. temperature 350°C**
	• **Digital Control**	• **Glass ceramic**



DESCRIPTION

Professional Contact Cooking System with Glass Ceramic plates, suitable for cooking a wide array of different foods, as such: toast, sandwich, meat, fish, vegetables, eggs, etc.
High quality cooking result thanks to heat distribution uniformity and use of shock resistance, non-stick, non-porous and impermeable to smells and tastes Glass Ceramic Cooking Surfaces.
High versatility of use thanks to **SHB™ Plus** technology which allows combined heating (contact + infrared) and high cooking Temperature setting.
Up to 60% saving in Preheating Time thanks to **SHB™ Plus.**
Up to 60% saving in Energy consumption thanks to the **Protek.Safe™** high efficiency insulation system which eliminates unnecessary energy loss.

STANDARD COOKING FEATURES

SETTINGS:

- **X.TOUCH™** Digital Control
- Temperature set: 0 °C –350 °C.
- Timer function
- Alarm end-of-cooking cycle
- Up to 4 setting programmes
- Stand by mode
- Timer mode

PROGRAMS:

- Time and Temperature Values storing

STANDARD TECHNICAL FEATURES

- **Single Black Ribbed/ Smooth Glass Ceramic cooking plates:**
  1 250x250 mm.
- Stainless Steel Case
- Ergonomic Handle
- Self-looking Handle Bracket
- 4 Non-Slip Feets
- Removable Dip Tray
- ON/OFF button and LED light

ACCESSORIES

- **METAL SCRAPER**
  Metallic scraper for Glass Ceramic Surfaces (included)
- **SPIDO CLEAN SPRAY DETERGENT**
  750 ml Spray Detergent for Glass Ceramic and
  Steel Surfaces (to be purchased separately)

CE

SP 010 XR

Views
Connection positions
Dimensions and Weights
Installation requirements
Power supply

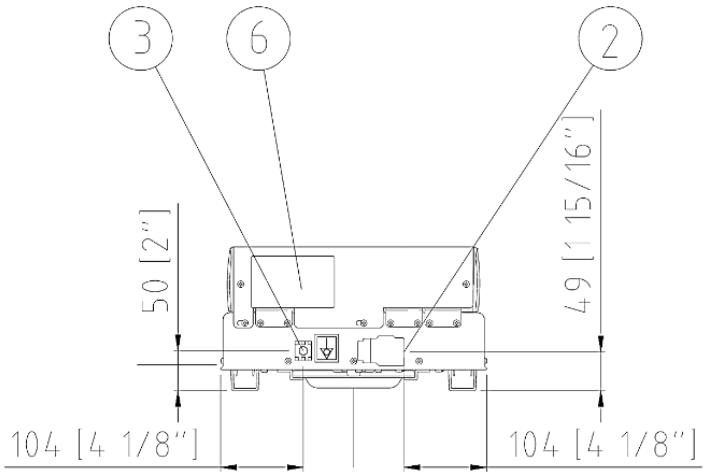

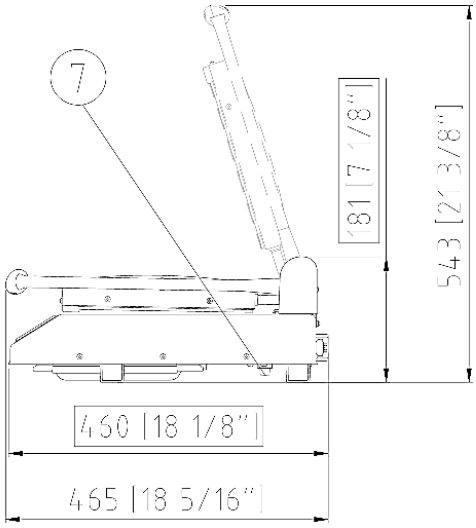

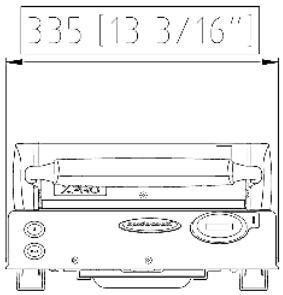

CONNECTION POSITIONS	
2	Terminal board power supply
3	Unipotential terminal
6	Technical data plate
7	Safety thermostat

DIMENSIONS AND WEIGHT	
Width	335 mm
Depth	460 mm
Height	181 mm
Net Weight	10 Kg

INSTALLATION REQUIREMENTS
Installations must conform to all local electrical systems, specifically minimum wire gauge required for field connection, and ventilation codes.

POWER SUPPLY	STANDARD
Voltage	230 V
Phase	1PH+N+PE
Cycle	50-60 Hz
Power	1.5 kW
Maximum Amp Draw	6,5 A
Power cable requirement	H07RN-F 3G 1.5 mm^2
Cord diameter	10 mm
Plug	SCHUKO

SP 010 XR

Wiring diagrams

